ThinkStation P410 Platform Specifications

Components	Specification
Chipset	Intel C612 Platform Controller Hub (PCH)
System mgmt	Intel Active Management Technology 9
Processor	Up to one 140W Intel Xeon E5-1600 v4 family processors. Some Intel Xeon E5-2600 v4 processers are also available:

E5-2637 v4	4C/3.5GHz/15MB/135W/DDR4-2400
E5-2623 v4	4C/2.6GHz/10MB/85W/DDR4-2133
E5-2620 v4	8C/2.1GHz/20MB/85W/DDR4-2133
E5-1680 v4	8C/3.4GHz/20MB/140W/DDR4-2400 333
E5-1660 v4	8C/3.2GHz/20MB/140W/DDR4-2400
E5-1650 v4	6C/3.6GHz/15MB/140W/DDR4-2400
E5-1630 v4	4C/3.7GHz/10MB/140W/DDR4-2400
E5-1620 v4	4C/3.5GHz/10MB/140W/DDR4-2400
E5-1607 v4	4C/3.1GHz/10MB/140W/DDR4-2133
E5-1603 v4	4C/2.8GHz/10MB/140W/DDR4-2133

Coprocessor	None
Memory DIMM slots	4 DIMM sockets. 4-channel capable. RDIMM. ECC. DDR4-2400
Memory capacity	128GB (32GB x 4)
Graphics	Two PCIe 3.0 x16 slots, up to two NVIDIA Quadro M4000, or up to one Quadro P5000
Supporting Graphics and GPU computing	

Adapter	Cores	Memory	Power	Connector***	SLI
NVS 310	48	1GB	19.5W	2xDP	
NVS 315	48	1GB	19.5W	2xDVI-I SL/2xDP	
NVS 510	192	2GB	35W	4xmini DP	
NVS 810	1024	4GB	68W	8xmini DP	
Quadro K420	192	2GB	41W	DVI-I DL+DP	
Quadro K620	384	2GB	45W	DVI-I DL+DP	
Quadro K1200	512	4GB	45W	4xmini DP	
Quadro M2000	768	4GB	75W	4xDP	
Quadro M4000	1664	8GB	120W	4xDP	
Quadro M5000	2048	8GB	150W	DVI-I DL+4xDP	
Quadro P400	256	2GB	30W	3xminiDP	
Quadro P600	384	2GB	40W	4xminiDP	
Quadro P1000	640	4GB	47W	4xminiDP	
Quadro P2000	1024	5GB	75W	4xDP	
Quadro P4000	1792	8GB	105W	4xDP	SLI
Quadro P5000	2560	16GB	180W	DVI-D DL+4xDP	

Disk drive controller	**RAID 0, 1, 5, 10** with onboard SATA controller in chipset, SATA 6Gb/s. Optional **RAID 0, 1, 10** with optional LSI 9340-8i PCIe adapter, 12Gb/s SAS and SATA, optional upgrade to RAID 5 is available
Drive Bays	Two external 5.25" flex bays, two internal 3.5" bays. Up to one 9.5mm optical plus four 3.5"/2.5" disk drives plus three M.2 PCIe SSD (see right)
Supporting storage	

3.5" HDD, 7.2K SATA6Gbs	500GB/1TB/2TB/3TB/4TB/6TB, 1TB/2TB hybrid
2.5" HDD, 10K SAS12Gbs	300GB/600GB
2.5" SSD, SATA6Gbs	180GB/240GB/256GB/480GB/512GB with OPAL, 256GB/512GB/1TB without OPAL
PCIe SSD, M.2 via PCIe 3.0 x4 adapter	256GB/512GB/1TB, NVMe

Flex connector	None
Network interfaces	One onboard gigabit ethernet, Intel I218LM, supports Wake-on-LAN. Optional discrete ethernet adapters are available
HD Audio	Realtek ALC662 codec
TPM	TCG 1.2-compliant
Power supply	One fixed 450 watts, autosensing, 92%, 80 PLUS Platinum qualified
Front ports	Two USB 3.0, microphone (3.5mm), headphone (3.5mm)
Rear ports	Two USB 2.0, four USB 3.0, one ethernet (RJ-45), three analog audio ports (line-in, line-out, mic-in)

Components	Specification
Additional ports	Supports the following optional ports: Two IEEE 1394 (one on rear and one on front flex module) via PCIe adpater, up to one adapter per system. Two rear USB 3.0 per PCIe adapter, up to three adapters per system. One rear Thunderbolt via PCIe adapter, or two front Thunderbolt (on flex module) via PCIe adapter, front and rear Thunderbolt cannot be intermixed. One rear serial via cable, up to one per system. One front eSATA (on flex module), or one rear eSATA via cable and PCIe slot bracket, up to one eSATA port per system
Media reader	9-in-1 USB 2.0 card reader. Optional 29-in-1 USB 2.0 card reader on flex module
Mechanical	• 6.89"W x 16.77"D x 14.8"H • 175mm W x 426mm D x 376mm H • 30.86 lb (14kg) max configuration • 25-liter
Environmental specification	

Temperature - operating	50 °F to 95 °F (10 °C to 35 °C)
Temperature - non operating (no package)	14 °F to 140 °F (-10 °C to 60 °C)
Temperature - non operating (with package)	-40 °F to 140 °F (-40 °C to 60 °C)
Altitude - operating	(Unpressurized): 0-10000ft (0-3048m)
Humidity - operating	10%~80%, non-condensing
Humidity - storage (with package)	10%~90%, non-condensing

RoHS-compliant, GREENGUARD on all models. EPEAT Gold rating, ENERGY STAR 6.1 qualified on selected models.

Base warranty	1 or 3-year limited onsite service with 9x5/NBD
ISV certifications	Please visit www.thinkworkstations.com/isv-certifications/

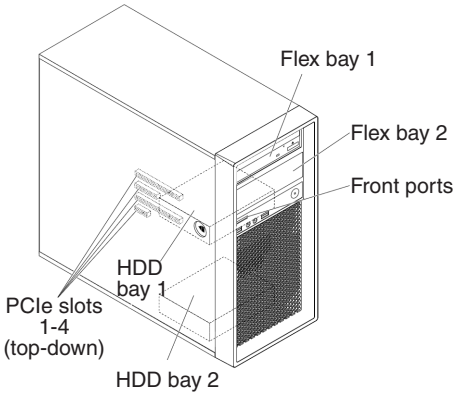

Expansion slots

Slot 1	PCIe 3.0 x16, full length, full height
Slot 2	PCIe 3.0 x8, full length, full height
Slot 3	PCIe 3.0 x16, full length, full height
Slot 4	PCIe 2.0 x4, half length, full height

Drive Bays

HDD bay 1	3.5", for one 3.5"/2.5" drive
HDD bay 2	3.5", for one 3.5"/2.5" drive
Flex bay 1	HH optical, or 3.5" HDD bay via optional conversion kit, or slim optical+3.5" HDD bay kit via optional conversion kit, or flex module
Flex bay 2	HH optical, or 3.5" HDD bay via optional conversion kit, or slim optical+3.5" HDD bay kit via optional conversion kit, or flex module

Note:
1. HDD bay 2 is not available when one Quadro M5000, two Quadro M4000, or two NVS 810 are used.
2. Flex module supports one or more of the following options: 9.5mm optical/29-in-1 USB 2.0 reader/one front IEEE 1394/one front eSATA/two front Thinderbolt. Up to one flex module is supported per system.
3. Up to one slim optical+3.5" HDD bay kit is supported per system.

© Copyright Lenovo 2017. All rights reserved.